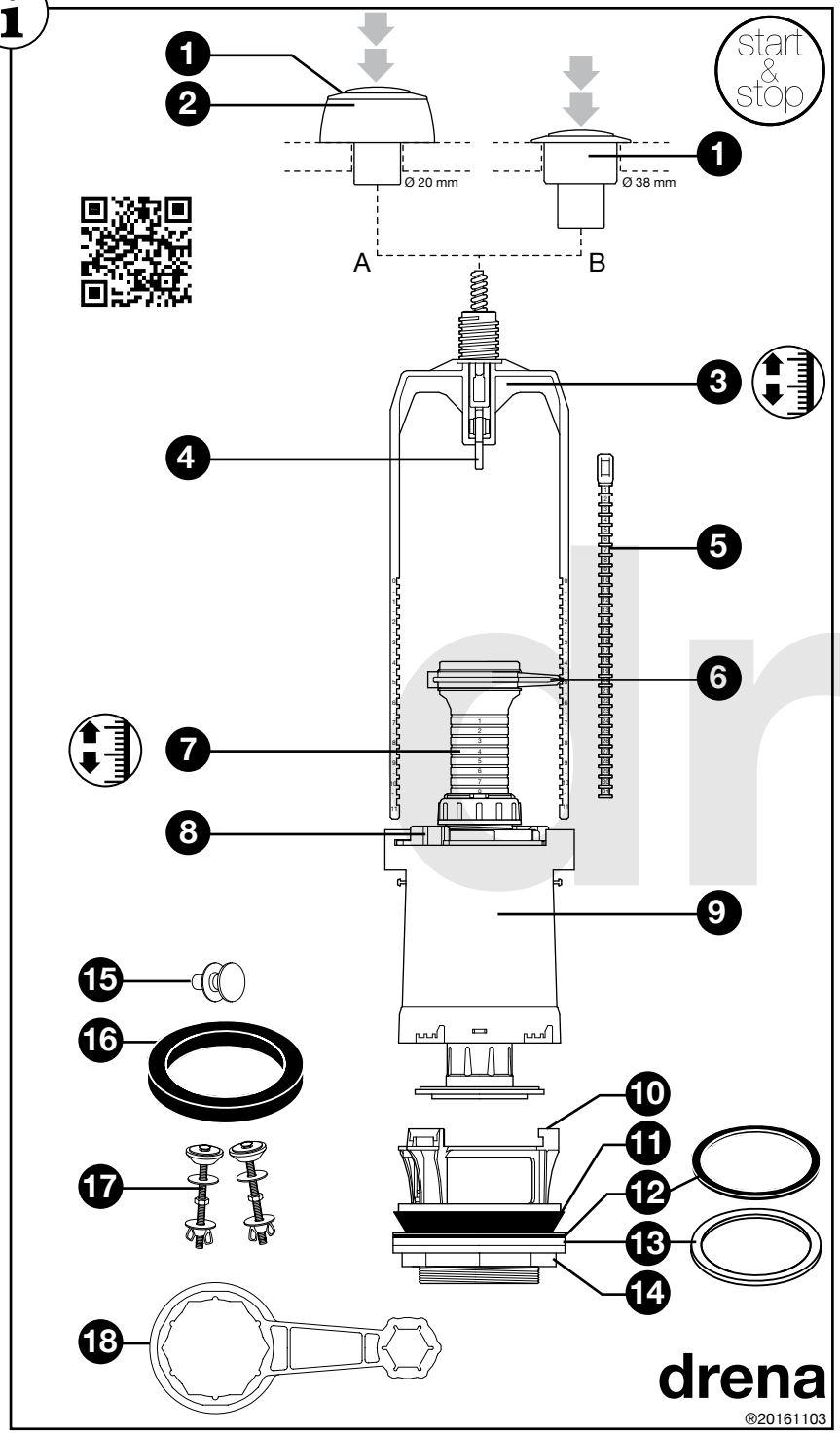
start & stop
Ø 20 mm
Ø 38 mm
A
B
drena
®20161103

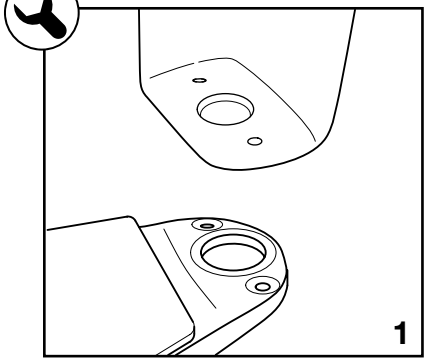
1

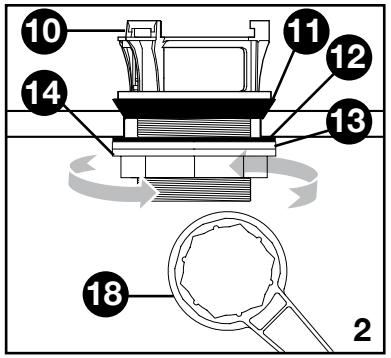
2

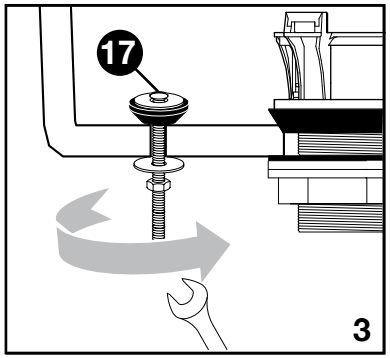
3

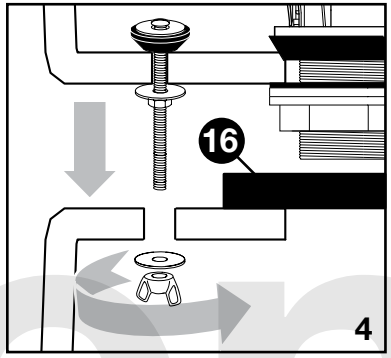
4

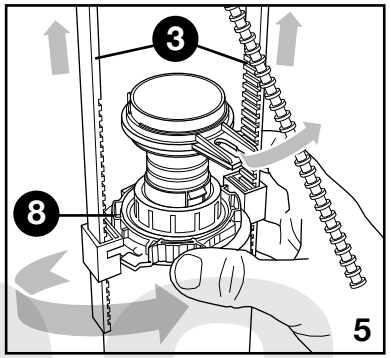
5

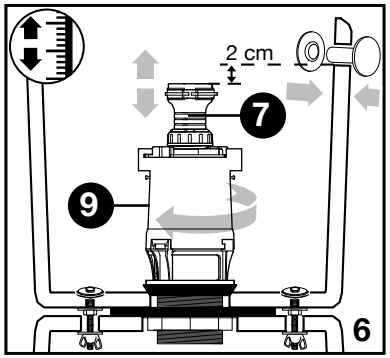
2 cm
6

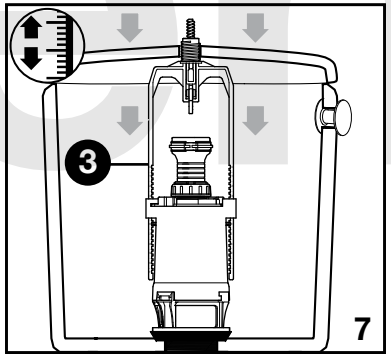
7

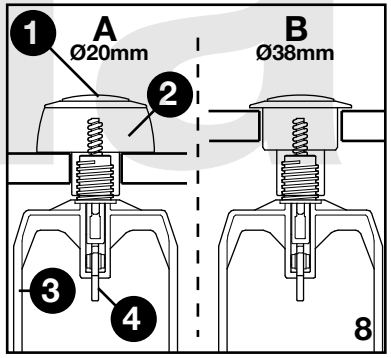
A
Ø20mm
B
Ø38mm
8

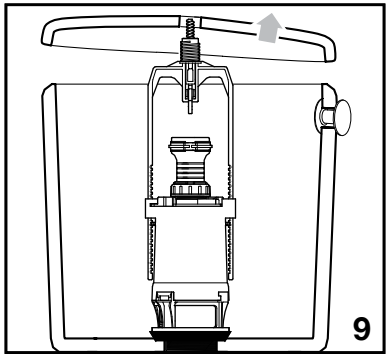
9

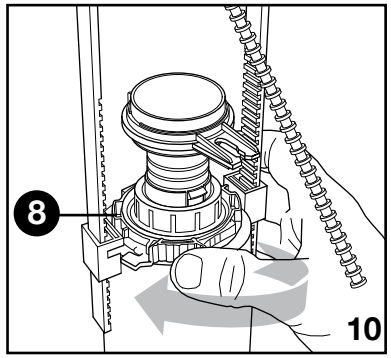
10

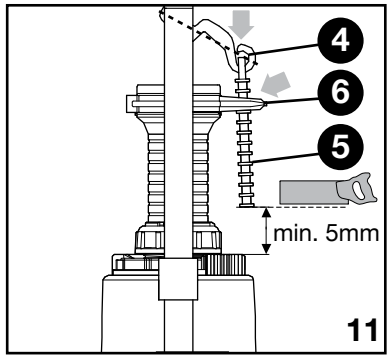
min. 5mm
11

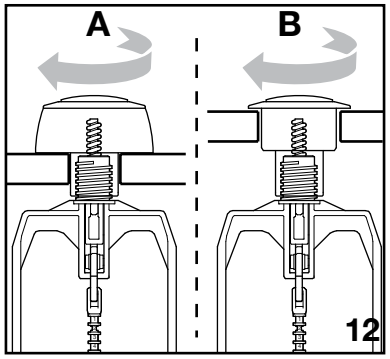
A
B
12